intertek inform

LICENCE
for

AS 1319 - Safety signs for the occupational environment (Reconfirmed 2018)

Licensee: Kiran Gokal

Date: 2026-03-11 02:59:16 GMT

This material is electronically reproduced by Intertek Inform under license from Standards Australia who retain full copyright in the document.

No part of the printed publication, nor any part of this electronic file, may be reproduced or transmitted in any form, including transmittal by e-mail, by File Transfer Protocol (FTP), or by being made part of a network-accessible system, without the prior written permission of the Publisher or Intertek Inform.

Intertek Inform makes no guarantees or warranties as to the correctness of the document or as to the results arising from the purchase and use of the document and is not responsible for problems in the delivery of the document. Any difficulties or queries should be addressed to Intertek Inform below.

In USA and Canada Contact

Intertek Inform, 545 E Algonquin Rd Arlington Heights ON
IL 60005, USA
+1 416 401 8730. Email: i2iSupport-US@intertekinform.com

In Europe Contact

Intertek Inform, Heron House, Davy Avenue, Knowlhill, Milton Keynes, MK5 8HJ, UK
+44 203 327 3140. Email: i2iSupport-EMEA@intertekinform.com

In Asia/Pacific Contact

Intertek Inform Ltd, Level 7, 45 Clarence Street, Sydney, NSW 2000, Australia
+61 131 242. Email: i2iSupport-APAC@intertekinform.com

Web: www.intertekinform.com

To read the full licence agreement, simply click within the black box above and scroll through with your cursor

Standards Management

Adopt a powerful, user-friendly Standards Management solution

Regulatory Management

Access a comprehensive database of legislation with Lawlex

Copyrighted material licensed to Intertek Inform^WSP - Parsons Brinckerhoff.Further reproduction, distribution, storage or use on a network is prohibited.
Printed / viewed by: [kiran.gokal@wsp.com] @ 2026-03-11

AS 1319—1994
Reconfirmed 2018

Australian Standard®

Safety signs for the occupational environment

Copyrighted material licensed to Intertek Inform^WSP - Parsons Brinckerhoff.Further reproduction, distribution, storage or use on a network is prohibited.
Printed / viewed by: [kiran.gokal@wsp.com] @ 2026-03-11

This Australian Standard was prepared by Committee SF/5, Industrial Warning Signs. It was approved on behalf of the Council of Standards Australia on 1 February 1994 and published on 18 April 1994.

The following interests are represented on Committee SF/5:

Australian Chamber of Commerce and Industry

Australian and New Zealand Society of Occupational Medicine

Bureau of Steel Manufacturers of Australia

Design Institute of Australia

Electricity Supply Association of Australia

National Safety Council of Australia

Occupational Health and Safety Authority, Victoria

Railways of Australia Committee

University of N.S.W.

WorkCover Authority of N.S.W.

Worksafe Australia

Review of Australian Standards. *To keep abreast of progress in industry, Australian Standards are subject to periodic review and are kept up to date by the issue of amendments or new editions as necessary. It is important therefore that Standards users ensure that they are in possession of the latest edition, and any amendments thereto.*

Full details of all Australian Standards and related publications will be found in the Standards Australia Catalogue of Publications; this information is supplemented each month by the magazine 'The Australian Standard', which subscribing members receive, and which gives details of new publications, new editions and amendments, and of withdrawn Standards.

Suggestions for improvements to Australian Standards, addressed to the head office of Standards Australia, are welcomed. Notification of any inaccuracy or ambiguity found in an Australian Standard should be made without delay in order that the matter may be investigated and appropriate action taken.

This Standard was issued in draft form for comment as DR 93134.

STANDARDS AUSTRALIA

RECONFIRMATION

OF

AS 1319–1994

Safety signs for the occupational environment

RECONFIRMATION NOTICE

Major stakeholders of this publication have reviewed the content of this publication and in accordance with Standards Australia procedures for reconfirmation, it has been determined that the publication is still valid and does not require change.

Certain documents referenced in the publication may have been amended since the original date of publication. Users are advised to ensure that they are using the latest versions of such documents as appropriate, unless advised otherwise in this Reconfirmation Notice.

Approved for reconfirmation in accordance with Standards Australia procedures for reconfirmation on 29 August 2018.

Copyrighted material licensed to Intertek Inform^WSP - Parsons Brinckerhoff.Further reproduction, distribution, storage or use on a network is prohibited.
Printed / viewed by: [kiran.gokal@wsp.com] @ 2026-03-11

NOTES

Copyrighted material licensed to Intertek Inform^WSP - Parsons Brinckerhoff.Further reproduction, distribution, storage or use on a network is prohibited.
Printed / viewed by: [kiran.gokal@wsp.com] @ 2026-03-11

Copyrighted material licensed to Intertek Inform^WSP - Parsons Brinckerhoff.Further reproduction, distribution, storage or use on a network is prohibited.
Printed / viewed by: [kiran.gokal@wsp.com] @ 2026-03-11

Australian Standard®

Safety signs for the occupational environment

First published as AS C24—1952.
Revised and redesignated AS 1319—1972.
Second edition 1979.
Third edition 1983.
Fourth edition 1994.

PUBLISHED BY STANDARDS AUSTRALIA
(STANDARDS ASSOCIATION OF AUSTRALIA)
1 THE CRESCENT, HOMEBUSH, NSW 2140
ISBN 0 7262 8811 X

Copyrighted material licensed to Intertek Inform^WSP - Parsons Brinckerhoff.Further reproduction, distribution, storage or use on a network is prohibited.
Printed / viewed by: [kiran.gokal@wsp.com] @ 2026-03-11

PREFACE

This Standard was prepared by the Standards Australia Committee on Industrial Warning Signs to supersede AS 1319—1983.

The two principal reasons for revising the Standard at this time are firstly to incorporate six new symbolic signs into the Standard, and secondly to alter the basic designs of signs with text messages to incorporate the colour and shape coding of symbolic signs.

The six new signs have been accepted as a result of successful comprehension testing in accordance with procedures similar to those now specified in AS 2342. The testing was carried out by Standards Australia with the financial and practical assistance of a number of large industrial employers in both public and commercial enterprises.

Signs whose function is to warn of hazards and danger have now been grouped under the general heading of hazard signs, and subdivided into DANGER signs and warning signs, the former to be used where the hazard is considered to be potentially life threatening. The term *warning* now replaces the term *caution* in previous editions, for consistency with road signs and water safety signs (neither term is now actually used on signs).

The shape coding for warning signs has been retained as a triangle, despite the use of the diamond as a warning shape for road signs and water safety signs. The Committee considered that the potential for confusion with certain signs in the Hazchem series (see AS 1216*), notably those for oxidizing agents, would render use of the yellow diamond shape undesirable for general warning signs in the industrial environment.

The text of this Standard has also been modified and expanded to provide more guidance on the design, manufacture and use of industrial safety signs.

The terms 'normative' and 'informative' have been used in this Standard to define the application of the appendix to which they apply. A 'normative' appendix is an integral part of a Standard, whereas an 'informative' appendix is only for information and guidance.

---

* AS 1216, *Classification, hazard identification and information systems for dangerous goods*.

© Copyright — STANDARDS AUSTRALIA

Users of Standards are reminded that copyright subsists in all Standards Australia publications and software. Except where the Copyright Act allows and except where provided for below no publications or software produced by Standards Australia may be reproduced, stored in a retrieval system in any form or transmitted by any means without prior permission in writing from Standards Australia. Permission may be conditional on an appropriate royalty payment. Requests for permission and information on commercial software royalties should be directed to the head office of Standards Australia.

Standards Australia will permit up to 10 percent of the technical content pages of a Standard to be copied for use exclusively in-house by purchasers of the Standard without payment of a royalty or advice to Standards Australia.

Standards Australia will also permit the inclusion of its copyright material in computer software programs for no royalty payment provided such programs are used exclusively in-house by the creators of the programs.

Care should be taken to ensure that material used is from the current edition of the Standard and that it is updated whenever the Standard is amended or revised. The number and date of the Standard should therefore be clearly identified.

The use of material in print form or in computer software programs to be used commercially, with or without payment, or in commercial contracts is subject to the payment of a royalty. This policy may be varied by Standards Australia at any time.

Copyrighted material licensed to Intertek Inform^WSP - Parsons Brinckerhoff.Further reproduction, distribution, storage or use on a network is prohibited.
Printed / viewed by: [kiran.gokal@wsp.com] @ 2026-03-11

CONTENTS

Page

FOREWORD 4

SECTION 1 SCOPE AND GENERAL
1.1 SCOPE 5
1.2 REFERENCED DOCUMENTS 5
1.3 DEFINITIONS 5
1.4 GENERAL REQUIREMENTS 6

SECTION 2 CLASSIFICATION AND LAYOUT OF SIGNS
2.1 SIGN CLASSIFICATION AND USE 8
2.2 COLOUR, SHAPE AND ENCLOSURE CODING 8
2.3 SIGN LAYOUTS 8

SECTION 3 DESIGN OF SIGNS
3.1 GENERAL REQUIREMENTS 15
3.2 USE OF SYMBOLS AND SYMBOLIC SIGNS 15
3.3 SIGN LAYOUT DESIGN 15
3.4 SIGN SIZE, LEGEND AND LEGIBILITY 15
3.5 SIGN FACE MATERIALS AND COLOURS 17

SECTION 4 CONSTRUCTION, INSTALLATION AND MAINTENANCE OF SIGNS
4.1 SIGN CONSTRUCTION, ERECTION AND REMOVAL 19
4.2 SIGN LOCATION 19
4.3 SIGN MAINTENANCE 20

SECTION 5 ACCIDENT PREVENTION TAGS
5.1 GENERAL DESCRIPTION 21
5.2 DESIGN OF TAGS 21

APPENDICES
A SPECIFICATION OF SAFETY COLOURS 22
B INDEX OF SYMBOLIC SAFETY SIGNS 24
C DESIGN OF DANGER SIGN SYMBOLS 33
D GUIDE FOR THE LAYOUT DESIGN OF SAFETY SIGNS 34
E GUIDE FOR THE USE OF RETROREFLECTIVE MATERIAL ON SIGNS . . 38
F RECOMMENDED LIGHTING LEVELS FOR ILLUMINATED SIGNS 39

Copyrighted material licensed to Intertek Inform^WSP - Parsons Brinckerhoff.Further reproduction, distribution, storage or use on a network is prohibited.
Printed / viewed by: [kiran.gokal@wsp.com] @ 2026-03-11

FOREWORD

Symbols and symbolic signs are often regarded as a means of visual communication superior to words. With well designed graphics, a symbolic sign can have greater legibility than one with words, and provided the meaning is reasonably self-evident to the people for whom its message is intended, it can transcend language barriers. However, whether the meaning is sufficiently self-evident cannot be reliably assessed without comprehension testing in accordance with AS 2342. This Standard, therefore, requires that only the symbolic signs specified shall be used, except where a new symbol has been introduced after testing as set out in Clause 3.2.

The Standard also makes provision for combination word/symbol signs. These may be in the form of either a 'composite' sign, where the words are used to qualify or augment the message, or a 'hybrid' sign where the meaning of the symbol is merely repeated in words. Use of the latter is generally deprecated because, if the symbol performed satisfactorily in comprehension testing, it should not be necessary. The need to provide a hybrid sign is generally indicative of a symbol which does not convey its meaning adequately, and therefore, either needs further attention to its design, or should be abandoned in favour of words. However, if a symbol has been accepted entirely on the results of the *recall* test in AS 2342 after having failed the *comprehension* test, its use as a hybrid sign may need to be considered (see Clause 2.3.3(d) of this Standard).

Copyrighted material licensed to Intertek Inform^WSP - Parsons Brinckerhoff.Further reproduction, distribution, storage or use on a network is prohibited.
Printed / viewed by: [kiran.gokal@wsp.com] @ 2026-03-11

STANDARDS AUSTRALIA

Australian Standard

Safety signs for the occupational environment

SECTION 1 SCOPE AND GENERAL

1.1 SCOPE This Standard sets out requirements for the design and use of safety signs intended for use in the occupational environment to regulate and control safety related behaviour, to warn of hazards and to provide emergency information including fire protection information. It does not include EXIT signs of the type specified in AS 2293.1 for use inside buildings.

1.2 REFERENCED DOCUMENTS The following documents are referred to in the Standard:

AS
1742 Manual of uniform traffic control devices
1742.1 Part 1: General introduction and index of signs

1744 Standard alphabets for road signs

2293 Emergency evacuation lighting in buildings
2293.1 Part 1: Design and installation

2342 Development, testing and implementation of information and safety symbols and symbolic signs

2700 Colour standards for general purposes

AS/NZS
1906 Retroreflective materials and devices for road traffic control purposes
1906.1 Part 1: Retroreflective materials

BS
873 Road traffic signs and internally illuminated bollards
873.5 Part 5: Specification for internally illuminated signs and external lighting luminaires

1.3 DEFINITIONS For the purpose of this Standard the definitions below apply.

1.3.1 Background—that part of a sign that is behind the legend.

1.3.2 Combination signs—

(a) *Combination sign*—a sign which comprises both words and a symbol.

(b) *Composite sign*—a combination sign on which the words qualify or augment the symbol.

(c) *Hybrid sign*—a combination sign on which the words simply repeat the message given by the symbol.

1.3.3 Danger—applied in the context of safety signs to a situation which is likely to be life threatening if the message is ignored.

1.3.4 Enclosure—a coloured band that outlines and emphasizes the symbolic shape of a sign (sometimes referred to as the border).

COPYRIGHT

Copyrighted material licensed to Intertek Inform^WSP - Parsons Brinckerhoff.Further reproduction, distribution, storage or use on a network is prohibited.
Printed / viewed by: [kiran.gokal@wsp.com] @ 2026-03-11

1.3.5 Function—the purpose of a sign, e.g. to indicate prohibition or mandatory requirements, to warn, or to inform.

1.3.6 Legend—the message content of a sign in words (text) or symbols, or a combination of these.

1.3.7 Responsible person—the person legally responsible for the maintenance and management of safety and safety practices in a workplace or on a works site.

1.3.8 Safety colour—any one of the colours specified in Appendix A to which a safety meaning is attributed.

1.3.9 Shall—the word 'shall' is to be understood as mandatory.

1.3.10 Should—the word 'should' is to be understood as non-mandatory, i.e. advisory or recommended.

1.3.11 Sign—an inscribed board, plaque or other delineated space on which a combination of legend and symbolic shape is used to convey a message.

NOTE: Definitions of the various classes of signs, i.e. regulatory, hazard, emergency information and fire signs are given in Clause 2.1.

1.3.12 Surround—a fine outline of background or base colour on the outer edge of a symbolic sign that is sometimes formed during the manufacturing process, or on the outer edge of a dark coloured border on a light coloured background.

1.3.13 Symbol—a graphic or pictorial device used to represent objects or concepts, but for the purposes of this Standard, excluding letters, numerals and punctuation symbols.

NOTE: Directional arrows, although normally classed as symbols, are dealt with in this Standard as though they were a separate sign element.

1.3.14 Symbolic shape—a characteristic shape and safety colour combination used to identify the function of a sign, and which may have a symbol superimposed, or may be used without a superimposed symbol as an element of a larger sign.

1.3.15 Symbolic sign—a sign comprising the combination of a graphic symbol and a symbolic shape, which may either stand alone, or may form an element of a composite sign containing text, other symbols, symbolic signs, or a combination of these.

1.3.16 Warning—applied in the context of safety signs to a situation which is likely to be hazardous but not likely to be life-threatening if the message is ignored.

NOTE: The term *caution* used in previous editions of this Standard has now been replaced by the term *warning*. The two terms are regarded as being interchangeable.

1.4 GENERAL REQUIREMENTS

1.4.1 Suitability for purpose The responsible person shall ensure that the type of sign used is suitable for the intended purpose. The assessment should include consideration of the following:

(a) Where there are to be words on a sign, is it likely that the meaning of the sign will need to be conveyed to persons not familiar with the English language? In addition to English, it may be necessary to repeat the message in one or more other languages, particularly if instant recognition of the message may be needed in a critical situation. Translated messages shall adhere as closely as practicable to the *intent* of the English version.

(b) If a symbol or symbolic sign is used, does the meaning, as specified in this Standard for that symbol or sign, accurately convey the message which needs to be conveyed by the sign? It may be necessary to add words to qualify or augment the message.

COPYRIGHT

Copyrighted material licensed to Intertek Inform^WSP - Parsons Brinckerhoff.Further reproduction, distribution, storage or use on a network is prohibited.
Printed / viewed by: [kiran.gokal@wsp.com] @ 2026-03-11

1.4.2 Accident prevention and education Safety signs draw attention to objects and situations affecting health and safety. Explanations of their functions and meanings should be included in employee induction training programmes. Where it is proposed to display a new sign or to change the location of an existing sign, employees should be informed beforehand, and an explanation given for the introduction of the new sign or the change in location of the existing one.

Safety signs do not replace the need for proper accident prevention measures.

COPYRIGHT

Copyrighted material licensed to Intertek Inform^WSP - Parsons Brinckerhoff.Further reproduction, distribution, storage or use on a network is prohibited.
Printed / viewed by: [kiran.gokal@wsp.com] @ 2026-03-11

SECTION 2 CLASSIFICATION AND LAYOUT OF SIGNS

2.1 SIGN CLASSIFICATION AND USE Safety signs are classified and shall be used according to their function as follows:

(a) *Regulatory signs* Signs containing instructions with which failure to comply constitutes either an offence at law, or a breach of standing orders, safety procedures or other directions, depending on which kind of control has been imposed at the work site or workplace. They are subdivided as follows:

(i) *Prohibition signs* Signs that indicate that an action or activity is not permitted.

(ii) *Mandatory signs* Signs that indicate that an instruction must be carried out.

(iii) *Limitation or restriction signs* Signs that place a numerical or other defined limit on an activity or use of a facility.

NOTE: No limitation or restriction signs are given in this Standard. However, the commonly used speed limit sign (see AS 1742.1, Sign No. R4-1) will often be encountered in the workplace.

(b) *Hazard signs* Signs advising of hazards. They are subdivided as follows:

(i) *DANGER signs* Signs warning of a particular hazard or hazardous condition that is likely to be life-threatening.

(ii) *Warning signs* Signs warning of a hazard or hazardous condition that is not likely to be life-threatening.

NOTE: The term *caution* used in earlier editions of this Standard has now been replaced by the term *warning* (see Preface). The two terms are regarded as being interchangeable.

(c) *Emergency information signs* Signs indicating the location of, or directions to, emergency related facilities such as exits, safety equipment or first aid facilities.

NOTE: The Standard excludes EXIT signs of the type specified in AS 2293.1 for use inside buildings.

(d) *Fire signs* Signs advising the location of fire alarms and fire-fighting facilities.

2.2 COLOUR, SHAPE AND ENCLOSURE CODING The symbolic shapes and colour coding for each of the sign functions listed in Clause 2.1 shall be as shown in Table 2.1.

Colours used on safety signs are specified in Clause 3.5.

2.3 SIGN LAYOUTS

2.3.1 General Sign layouts in each of the sign categories listed in Clause 2.1, except DANGER signs, may comprise symbolic signs (see Appendix B), signs with words or a combination of the two. DANGER signs have words only and messages which can only be classified as warnings of hazards (see Clause 2.3.4).

NOTE: Symbolic signs in the industrial safety sign category, shown in Appendix B, are numbered in the 401 to 499 series. Other number series for public information symbols and symbolic signs are as follows:

101—199: General information signs.
201—299: Water safety signs.
301—399: Hospital signs.

COPYRIGHT

Copyrighted material licensed to Intertek Inform^WSP - Parsons Brinckerhoff.Further reproduction, distribution, storage or use on a network is prohibited.
Printed / viewed by: [kiran.gokal@wsp.com] @ 2026-03-11

TABLE 2.1

COLOUR AND SHAPE REQUIREMENTS FOR SYMBOLIC SHAPES

Sign function	Symbolic shape (Note 1)	Legend colour (Note 2)
Regulatory prohibition		Black
Regulatory mandatory		White
Regulatory restriction	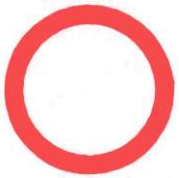	Black
Hazard warning		Black
Hazard danger		Black (for DANGER symbol details, see Clause 2.3.4)
Emergency information		White
Fire sign		White

NOTES:

1 On signs where an enclosure or background colour is shown as reaching to the edge of the signboard, a fine surround in the base colour of the signboard may be provided to aid manufacture.

2 Legend colour in third column refers to the colour when the legend is superimposed on the symbolic shape.

Copyrighted material licensed to Intertek Inform^WSP - Parsons Brinckerhoff.Further reproduction, distribution, storage or use on a network is prohibited.
Printed / viewed by: [kiran.gokal@wsp.com] @ 2026-03-11

Safety signs shall conform to the most appropriate of the layout designs given in Clauses 2.3.3 to 2.3.6 wherever practicable. If no standard layout meets the requirement, a standard layout may be adapted to suit, provided the designer adheres to the principles embodied in the specified layout designs.

The design of symbolic signs shall conform to the requirements of AS 2342, except that hazard warning signs shall be an equilateral triangle with a black enclosure of width equal to between 6 and 8 percent of the length of the side of the triangle.

2.3.2 Worded messages When classifying worded messages to determine to which sign function they belong, the distinction between a regulatory message and a warning message needs to be carefully observed. A regulatory sign must require a *mandatory* action or *prohibit* an action in accordance with established laws, rules or directions, rather than merely warn against taking certain action. An example would be DO NOT ENTER, LIVE WIRES as opposed to LIVE WIRES, KEEP AWAY. The first can be construed as a regulatory prohibition sign, especially if it clearly marks the entry to the prohibited area, whereas the second would normally warn people of the hazard of a certain action.

There will also be instances where a single compound message will appear to contain both regulatory and warning elements. Provided the message is truly a single compound, and does not contain a series of two or more unconnected or only loosely connected elements, the sign should be designed as a regulatory sign. DO NOT ENTER, LIVE WIRES is an example. It will rarely be good practice to combine an emergency information element with regulatory or warning elements.

Only messages which can be classified as hazard warning messages shall be used on DANGER signs.

2.3.3 Regulatory and warning signs The following layouts are permitted:

(a) *Single symbolic sign alone* These signs shall comprise a signboard cut to the circular or triangular symbolic shape of the sign. The symbolic shape covers the entire sign as shown in examples in Figure 2.1.

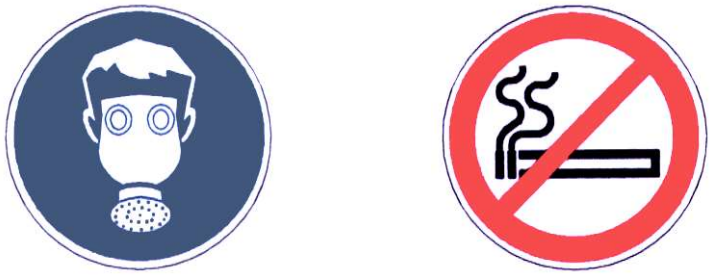

NOTE: A fine surround may be provided on these signs (see Note 1 to Table 2.1).

FIGURE 2.1 SINGLE SYMBOLIC SIGN

COPYRIGHT

Copyrighted material licensed to Intertek Inform^WSP - Parsons Brinckerhoff.Further reproduction, distribution, storage or use on a network is prohibited.
Printed / viewed by: [kiran.gokal@wsp.com] @ 2026-03-11

(b) *Single symbolic sign on target board* The symbolic sign may be placed on a square or rectangular target board as shown in the examples in Figure 2.2. The target board will normally be white but may be yellow for warning signs. Its purpose is to make the sign more conspicuous or to simplify mounting, or both. A black border with white or yellow surround may be placed around the target board.

As an alternative, warning signs may be placed on a black target board, provided a yellow surround is placed around the black enclosure.

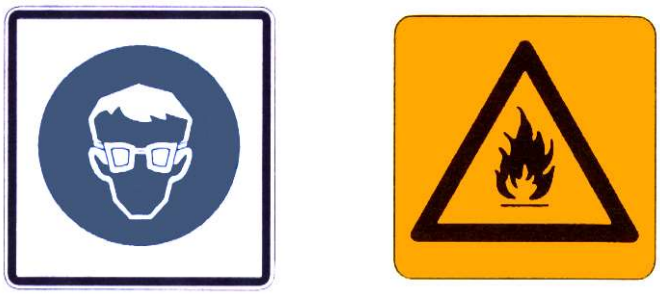

FIGURE 2.2 SYMBOLIC SIGN ON TARGET BOARD

(c) *Signs with two or more symbols only* Wherever it is necessary to display two or more symbolic signs at the one location, this may be done by placing separate signs side by side, or by incorporating the signs into a single signboard as shown in Figure 2.3. The background of the signboard is normally white, but may be yellow or black if it contains only warning signs. A black border with white or yellow surround may be placed around the target board.

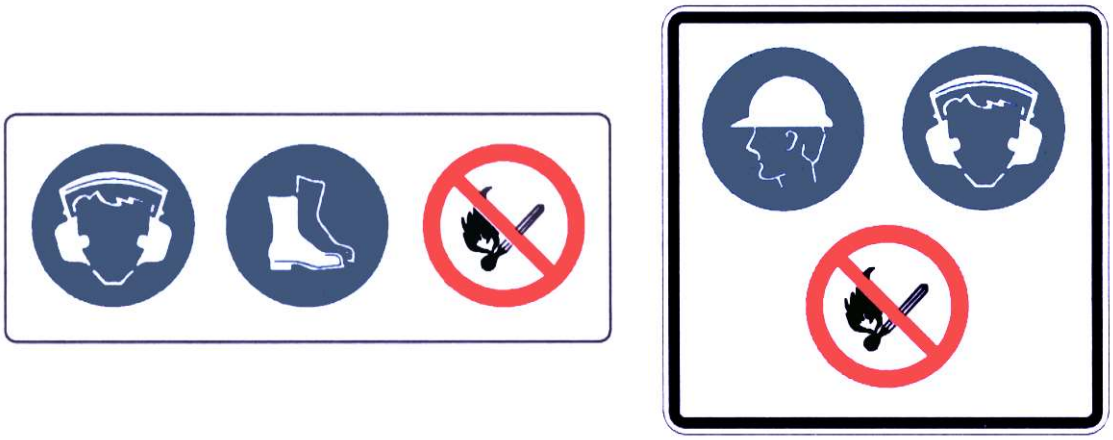

FIGURE 2.3 MULTIPLE SYMBOLIC SIGNS

When it is desired to display several symbolic signs at the one location, care should be taken to ensure that each sign is of sufficient size and located in such a position that it is both prominent and legible under all likely viewing conditions.

(d) *Combination signs with both a symbol and words* Signs in this category shall comprise on the one signboard, a symbolic sign together with words which may either augment or qualify the message given by the symbolic sign (commonly known as a 'composite' sign), or simply repeat the message given by the symbolic sign (commonly known as a 'hybrid' sign). Examples of each type of sign are shown in Figure 2.4. The background of the signs is normally white but may be yellow for warning signs. A black border with white or yellow surround may be placed around the signboard.

See also Clause 1.4.1(a) regarding the possible need to include languages other than English on the signs.

Copyrighted material licensed to Intertek Inform^WSP - Parsons Brinckerhoff.Further reproduction, distribution, storage or use on a network is prohibited.
Printed / viewed by: [kiran.gokal@wsp.com] @ 2026-03-11

(a) Composite signs (b) Hybrid signs

FIGURE 2.4 COMBINATION SIGNS

Composite signs may comprise either the symbolic sign and words on the same signboard, or the words on an auxiliary sign mounted in conjunction with the symbolic sign. The words should be placed below the symbol.

The following are examples of messages used on composite signs to qualify or augment symbolic signs:

(i) Classes of persons, times of day or other special circumstances to which the sign applies.

(ii) Additional instructions such as directional information (ON LEFT/RIGHT) or arrows.

(iii) Special descriptions of equipment depicted in symbols, e.g. DUST MASK.

(iv) Dimensions of a hazard.

(v) Specific description or name of a hazardous substance.

(vi) Safety advice or action required.

Hybrid signs should only be used where there is concern that some people on a site will not understand the meaning of a symbolic sign. This should normally occur only in the case of an abstract symbol which failed the comprehension test specified in AS 2342 and was accepted entirely on the results of the recall test, also specified in AS 2342.

(e) *Word-message signs* Signs in this category have the message entirely in words, but for sign type identification, a symbolic shape placed above or to the left of the words may be specified. Examples are shown in Figure 2.5. Word messages shall be complete within themselves regardless of whether a symbolic shape is also used on the sign. Regulatory signs shall have a white background, and warning signs, a yellow background. The word legend shall be black in all cases. A black border with white or yellow surround may be placed around the signboard. See also Clause 1.4.1(a) regarding the possible need to include languages other than English on the sign.

NOTE: A word-message sign will usually be required where no standard symbol exists, and a new symbol is either yet to be developed and tested to AS 2342, or it is not possible to communicate the message by means of a symbol.

COPYRIGHT

Prohibition messages shall have a symbolic shape comprising the red annulus and slash symbol with a plain white interior (see Table 2.1).

Warning messages shall have a symbolic shape comprising the yellow triangle (see Table 2.1) with black exclamation mark.

Mandatory signs shall comprise black words only, on a square or rectangular sign with a white background and its long axis vertical.

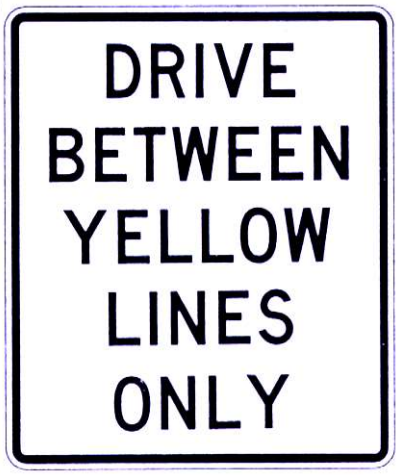

(a) Mandatory signs

(b) Warning signs

(c) Prohibition signs

FIGURE 2.5 SIGNS WITH WORDS ONLY

2.3.4 DANGER signs Signs in this category are of a special design which incorporates the word DANGER in white letters on a red symbolic oval shape. The signs shall comprise a white rectangle with black enclosure and white surround with the DANGER symbol on a black background placed above or to the left of the white rectangle, generally as shown in the examples in Figure 2.6, and as specified in Appendix C.

The legend within the white rectangle shall comprise a worded warning message in black letters. Symbols are not used on DANGER signs.

NOTE: The messages on DANGER signs are confined to the warning of a hazard which is likely to be life-threatening (see Clause 2.1(b)).

If a symbolic sign is required in conjunction with a DANGER sign, it shall be a separate sign placed beside or below the DANGER sign.

FIGURE 2.6 DANGER SIGNS

Copyrighted material licensed to Intertek Inform^WSP - Parsons Brinckerhoff.Further reproduction, distribution, storage or use on a network is prohibited.
Printed / viewed by: [kiran.gokal@wsp.com] @ 2026-03-11

COPYRIGHT

Copyrighted material licensed to Intertek Inform^WSP - Parsons Brinckerhoff.Further reproduction, distribution, storage or use on a network is prohibited.
Printed / viewed by: [kiran.gokal@wsp.com] @ 2026-03-11

2.3.5 Emergency information signs Emergency information signs shall comprise a white symbol or worded legend, or both, on a green rectangular sign with white enclosure. Where two or more signs are required at the one location, they may be placed on the one signboard, but each sign shall have its own white enclosure. Typical signs are shown in Figure 2.7.

NOTE: This Standard excludes EXIT signs of the type specified in AS 2293.1 for use inside buildings.

FIGURE 2.7 EMERGENCY INFORMATION SIGNS

2.3.6 Fire signs Fire signs shall comprise a red rectangular sign with white legend and enclosure. Legends shall comprise words or symbols, or both, indicating the location of fire alarms or fire-fighting facilities. Associated messages other than those indicating such facilities shall be conveyed by means of separate signs.

Typical fire signs are illustrated in Figure 2.8.

FIGURE 2.8 FIRE SIGNS

Copyrighted material licensed to Intertek Inform^WSP - Parsons Brinckerhoff.Further reproduction, distribution, storage or use on a network is prohibited.
Printed / viewed by: [kiran.gokal@wsp.com] @ 2026-03-11

SECTION 3 DESIGN OF SIGNS

3.1 GENERAL REQUIREMENTS The design of safety signs shall conform to the following general requirements:

(a) *Symbolic signs* Except as provided in Clause 3.2, symbolic signs shall be selected from those in the illustrated index of standard signs at Appendix B, and untested symbols or symbolic signs shall not be used.

(b) *Signs with word/symbol combinations or words only* Except for DANGER signs, the following shall apply:

(i) Where a symbolic sign forms part of a word/symbol combination sign the symbolic sign element shall be selected strictly in accordance with Item (a) above.

(ii) Where a symbolic shape is used in a worded-message sign, the symbolic shape shall be in accordance with Table 2.1 as regards both shape and colour.

(c) *DANGER signs* DANGER signs shall have word legends only and shall conform to the requirements of Clause 2.3.4.

3.2 USE OF SYMBOLS AND SYMBOLIC SIGNS Standard symbols and symbolic signs are shown in the illustrated index at Appendix B. Except as indicated below all stand-alone symbolic signs and symbolic signs used as elements of other signs shall be selected from this standard set.

An exception to this requirement shall be where a symbol or symbolic sign has been selected, developed, fully tested and found acceptable in accordance with AS 2342. All symbolic signs in Appendix B have been tested and accepted in accordance with AS 2342.

NOTE: Whenever it has been found necessary to use the recall test of AS 2342 to establish acceptability, a hybrid sign (see Clause 2.3.3(d)) will probably be required.

Where no symbol is available for a required purpose, a worded-message sign shall be used in the first instance. If it is believed that either a symbol could be developed, or a suitable (untested) symbol is already available, reference should be made to AS 2342 which specifies the complete development and testing procedure leading to the potential adoption of a symbol as an Australian Standard.

The requirements of this Clause do not affect the use of directional arrows or punctuation symbols in common usage.

NOTE: It is intended that organizations may introduce new symbols or symbolic signs for their own purposes, provided that they have carried out relevant testing to AS 2342, or that it has been carried out on their behalf, and that the required performance criteria have been achieved. However, inclusion of a new symbol in an Australian Standard will be dependent on the relevant Committee either being satisfied with documentary evidence that adequate testing to AS 2342 has taken place, or arranging for fresh testing.

3.3 SIGN LAYOUT DESIGN Guidance on the layout design of safety signs is given in Appendix D.

3.4 SIGN SIZE, LEGEND AND LEGIBILITY

3.4.1 General The sign and legend sizes recommended below are based on an observer with standard vision, viewing the sign at the maximum distance at which it would have relevance in the particular case, and include an allowance to ensure a reasonable level of sign prominence or ‘conspicuity’ under normally expected workplace conditions.

COPYRIGHT

Copyrighted material licensed to Intertek Inform^WSP - Parsons Brinckerhoff.Further reproduction, distribution, storage or use on a network is prohibited.
Printed / viewed by: [kiran.gokal@wsp.com] @ 2026-03-11

3.4.2 Symbolic sign and letter sizes The sizes for symbolic signs given below refer to the outer diameter of circular signs, the height of the triangle for hazard signs or the shortest side of the rectangle for symbolic emergency information signs.

Letters used on the worded parts of signs should be the standard road signs alphabet, Series B, C, D or E (see AS 1744). Letter spacings should be adequate to avoid loss of legibility when the sign is viewed at the maximum likely distance. Lower case letters from AS 1744 may also be considered in special cases. The letter sizes given below refer to the height of upper case letters, or the initial capital height of lower case letters.

Recommended minimum size are as follows:

(a) Signs in a factory or yard environment, where lighting is good and signs are mounted in reasonably prominent positions:

Symbolic sign size: 15 mm per metre of viewing distance.

Letter size:

Upper case: 5 mm per metre of viewing distance.

Lower case: 4 mm per metre of viewing distance.

NOTE: The above letter and sign sizes are approximately twice those required for legibility alone. This recommendation is based on the need to provide more prominent legends where signs will not always be within the observer's field of view.

(b) Signs in poor lighting conditions, not likely to fall readily into the observer's line of sight, or are otherwise likely to be placed in less conspicuous positions—increase legend sizes in Item (a) by 50 percent.

3.4.3 Legend colour The colours of word legends on signs are tabulated according to background colour in Table 3.1.

TABLE 3.1

COLOUR OF WORD LEGENDS

Background colour	Word legend colour
White (Regulatory)	Black
Yellow (Warning)	Black
Green (Emergency)	White
Red (Fire)	White

3.4.4 Sign size modification The selection of a sign size to satisfy minimum legibility requirements above, may not result in a satisfactory sign. The following factors may require an increase in the size of the sign:

(a) The need to ensure that the sign is conspicuous against a visually complex background.

(b) The need to emphasize a particularly important message such as a sign warning of a serious hazard, or providing vital information in an extreme emergency.

(c) The need to compensate for particularly poor illumination of the sign.

Increases of at least 50 percent in the area of a sign may be required in such cases.

3.4.5 Use of directional arrows The use of arrows with emergency information signs or fire signs to indicate the direction to a facility or an item of equipment, is illustrated in Figure 3.1, together with shape and dimensional details of two recommended forms of arrow.

An arrow should never be placed on the opposite side of a symbol or legend away from the direction to which it points.

COPYRIGHT

Copyrighted material licensed to Intertek Inform^WSP - Parsons Brinckerhoff.Further reproduction, distribution, storage or use on a network is prohibited.
Printed / viewed by: [kiran.gokal@wsp.com] @ 2026-03-11

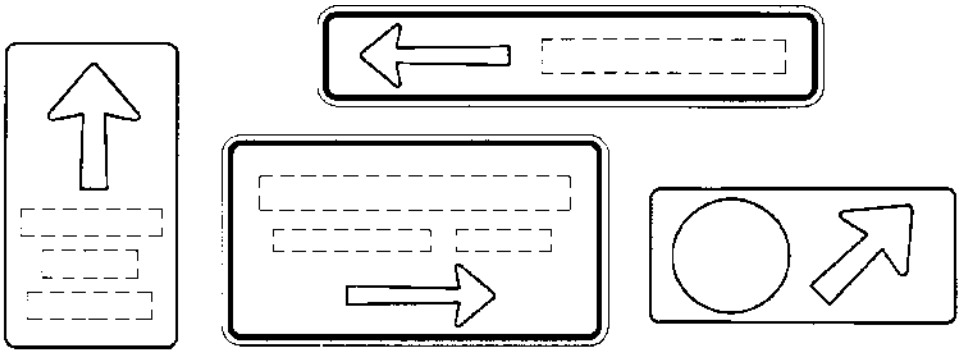

(a) Use of arrows on signs

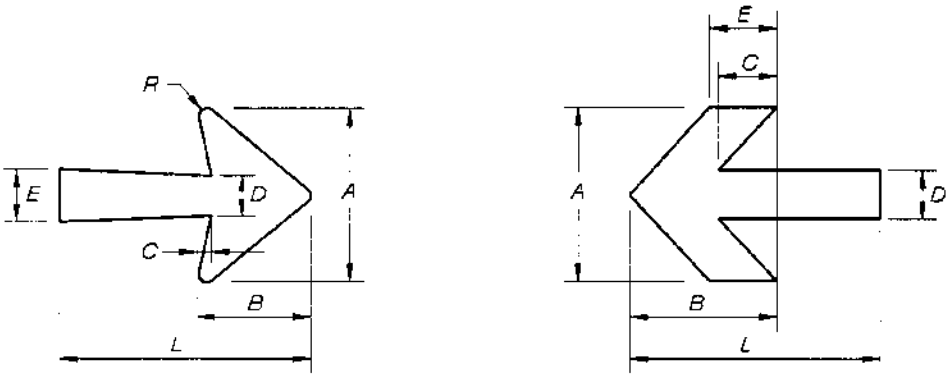

Arrow proportions

B	C	D	E	L	R
0.64A	0.08A	0.23A	0.30A	1.41A min.	0.045A

Arrow proportions

B	C	D	E	L
0.83A	0.33A	0.28A	0.38A	1.41A min.

(b) Recommended arrow styles

FIGURE 3.1 USE OF DIRECTIONAL ARROWS

3.5 SIGN FACE MATERIALS AND COLOURS

3.5.1 Non-retroreflective signs The colours of non-retroreflective (diffuse) surfaces shall conform to the colour specifications at Appendix A. The colours given in Table 3.2, specified in accordance with AS 2700, are indications of suitable sign colours conforming with Appendix A, and are recommended for use where colour matching of paint for painted surfaces, is required. A suitable colour in the Pantone Matching System (PMS) for printing on a *white* substrate is also shown against each colour.

TABLE 3.2

SAFETY SIGN COLOURS

Colour	Designation (AS 2700)
Red	R13— Signal red (PMS 186C, 1795U)
Yellow	Y15— Sunflower (PMS 136C, 115U)
Green	G21— Jade (PMS 349C, 348U)
Blue	B23— Bright blue (PMS 301C, 293U)

COPYRIGHT

Copyrighted material licensed to Intertek Inform^WSP - Parsons Brinckerhoff.Further reproduction, distribution, storage or use on a network is prohibited.
Printed / viewed by: [kiran.gokal@wsp.com] @ 2026-03-11

3.5.2 Retroreflective signs Retroreflective signs will only be of practical use when the sign is viewed under conditions of otherwise poor illumination, with a light source almost directly behind the observer. The retroreflective effect will not be seen if the angle subtended at the sign between the illuminating beam and the observer's line of sight is more than about 2 degrees.

Since there is some likelihood that *fire signs* will be viewed under illumination conditions favourable for retroreflection in emergency situations, it is recommended that they be reflectorized.

If used, retroreflective materials shall conform to AS/NZS 1906.1, including applied process colour.

Further guidance on the use of retroreflective materials for signs is given in Appendix E.

3.5.3 Self luminous materials Self luminous or phosphorescent materials can be of some value if used for signs which need to be seen in the dark, typically under emergency conditions. Their light output is low, and they will only be useful if they have recently been irradiated by normal lighting.

COPYRIGHT

Copyrighted material licensed to Intertek Inform^WSP - Parsons Brinckerhoff.Further reproduction, distribution, storage or use on a network is prohibited.
Printed / viewed by: [kiran.gokal@wsp.com] @ 2026-03-11

SECTION 4 CONSTRUCTION, INSTALLATION AND MAINTENANCE OF SIGNS

4.1 SIGN CONSTRUCTION, ERECTION AND REMOVAL Signs other than those painted directly on existing surfaces, shall be constructed and erected so that they do not create a hazard.

NOTE: Examples of signs erected hazardously are those projecting into passageways at such heights that persons, vehicles or mobile plant may strike them.

All signs should be removed immediately the information they contain is no longer relevant. This practice is especially important for signs warning of specific temporary hazards. When the hazard ceases to exist, the hazard sign should be removed promptly, e.g. signs giving warning of men working above should be removed when the overhead job is completed. Failure to observe this practice may induce disrespect for all signs.

4.2 SIGN LOCATION

4.2.1 Visibility Signs should be located where the messages are legible, and so that they attract the attention of, and are clearly visible to all concerned.

Visibility will be enhanced if a contrast exists between the predominant colour of the sign and that of its immediate surroundings, e.g. a green sign which of necessity has to be placed on a green wall, will be rendered more distinct if it has a white surround.

The sign mounting location should be such that the possibility of the sign becoming obscured by stacked materials or other visual obstructions is prevented or at least minimized.

4.2.2 Siting of signs Signs should be mounted as close as practicable to the observer's line of sight in the vertical plane. For a standing adult this will be approximately 5 degrees up or down from a point 1500 mm above ground or floor level in front of the observer. Signs which are free standing or mounted overhead shall be placed so that they are not a hazard to pedestrians.

4.2.3 Regulatory and hazard signs Regulatory and hazard signs should be so sited in relation to a particular hazard as to allow a person ample time after first viewing the sign to heed the warning. This distance will vary, e.g. signs warning against the touching of switches or other electrical equipment should be placed close to the equipment, whereas signs used in plant yards or on construction work should be placed sufficiently in advance of the hazard to permit the warning to be perceived before the hazard is reached.

4.2.4 Signs on moveable objects Signs should not be placed on moveable objects such as doors, windows or racks where a change in position would void the purpose of the sign or cause it to be out of sight. This does not apply to signs intended to be portable or moveable.

4.2.5 Illumination of signs External or internal illumination of signs should be considered where the general lighting, either natural or artificial, does not provide for adequate visibility of signs.

NOTE: This Standard excludes EXIT signs of the type specified in AS 2293.1 for use inside buildings.

In all cases, glare from lighting should be avoided. Special attention should also be given to signs subject to illumination from certain artificial light sources such as sodium vapour lamps, which cause change in the perception of colours.

COPYRIGHT

Guidance on the desirable lighting levels for illuminated signs is given at Appendix F. The use of retroreflective signs as a substitute for illumination may be feasible if the conditions described in Clause 3.5.2 are met.

4.2.6 Number of signs Care should be taken when considering the placing of several signs close together. The result may be that there is so much information in one place that little or none is absorbed, or the visual effect may be so confusing as to make it difficult to distinguish individual messages.

4.3 SIGN MAINTENANCE For maximum effectiveness, signs should be maintained in good condition, kept clean and well illuminated.

Copyrighted material licensed to Intertek Inform^WSP - Parsons Brinckerhoff.Further reproduction, distribution, storage or use on a network is prohibited.
Printed / viewed by: [kiran.gokal@wsp.com] @ 2026-03-11

COPYRIGHT

Copyrighted material licensed to Intertek Inform^WSP - Parsons Brinckerhoff.Further reproduction, distribution, storage or use on a network is prohibited.
Printed / viewed by: [kiran.gokal@wsp.com] @ 2026-03-11

SECTION 5 ACCIDENT PREVENTION TAGS

5.1 GENERAL DESCRIPTION An accident prevention tag is a miniature sign on card, paper, pasteboard or similar temporary or semi-permanent material, which can be attached to plant, equipment or other objects for the purpose of imposing a regulatory requirement, or for advising or informing users about some safety aspect of the item.

5.2 DESIGN OF TAGS Any form of sign permitted in this Standard may be miniaturized, and made as an accident prevention tag. However, where messages of a critical nature are to be conveyed, a stand-alone symbolic sign is preferred if a suitable standard sign exists. If text is to be used for a critical hazard message, it will generally be in the form of a DANGER sign.

A tag shall have minimum dimensions of 80 mm × 50 mm exclusive of any additional area required to tie or fix the tag to the plant or other item. The sign shall occupy as much of this area as practicable.

The background colour of the tag should be yellow for a warning sign, and white for a regulatory or DANGER sign.

COPYRIGHT

Copyrighted material licensed to Intertek Inform^WSP - Parsons Brinckerhoff.Further reproduction, distribution, storage or use on a network is prohibited.
Printed / viewed by: [kiran.gokal@wsp.com] @ 2026-03-11

APPENDIX A

SPECIFICATION OF SAFETY COLOURS

(Normative)

The CIE chromaticity co-ordinates of the non-retroreflective safety colours specified in this Standard shall lie within the colour spaces, the corners of which are specified in Table A1. These colour spaces are illustrated in Figure A1.

The luminance factor of the non-retroreflective safety colours specified in this Standard shall be within the limits specified in Table A1.

Colour specifications for the daytime diffuse colours of retroreflective materials, including colour processed materials, shall conform to AS/NZS 1906.1.

The requirements of this Appendix do not apply to material used for internally illuminated signs.

TABLE A1

CIE CHROMATICITY CO-ORDINATES AND LUMINANCE FACTOR OF SAFETY COLOURS

Safety colour designation	Chromaticity co-ordinates (Illuminant D_{65}; Instrument geometry 45/0)					Luminance factor, Y
		1	2	3	4	
Red	x	0.690	0.527	0.524	0.655	≥0.07
	y	0.310	0.315	0.351	0.345	
Blue	x	0.078	0.210	0.272	0.137	≥0.05
	y	0.171	0.260	0.199	0.038	
Yellow	x	0.541	0.494	0.427	0.465	≥0.45
	y	0.458	0.419	0.483	0.534	
Green	x	0.230	0.308	0.267	0.007	≥0.12
	y	0.754	0.421	0.391	0.703	

COPYRIGHT

Copyrighted material licensed to Intertek Inform^WSP - Parsons Brinckerhoff.Further reproduction, distribution, storage or use on a network is prohibited.
Printed / viewed by: [kiran.gokal@wsp.com] @ 2026-03-11

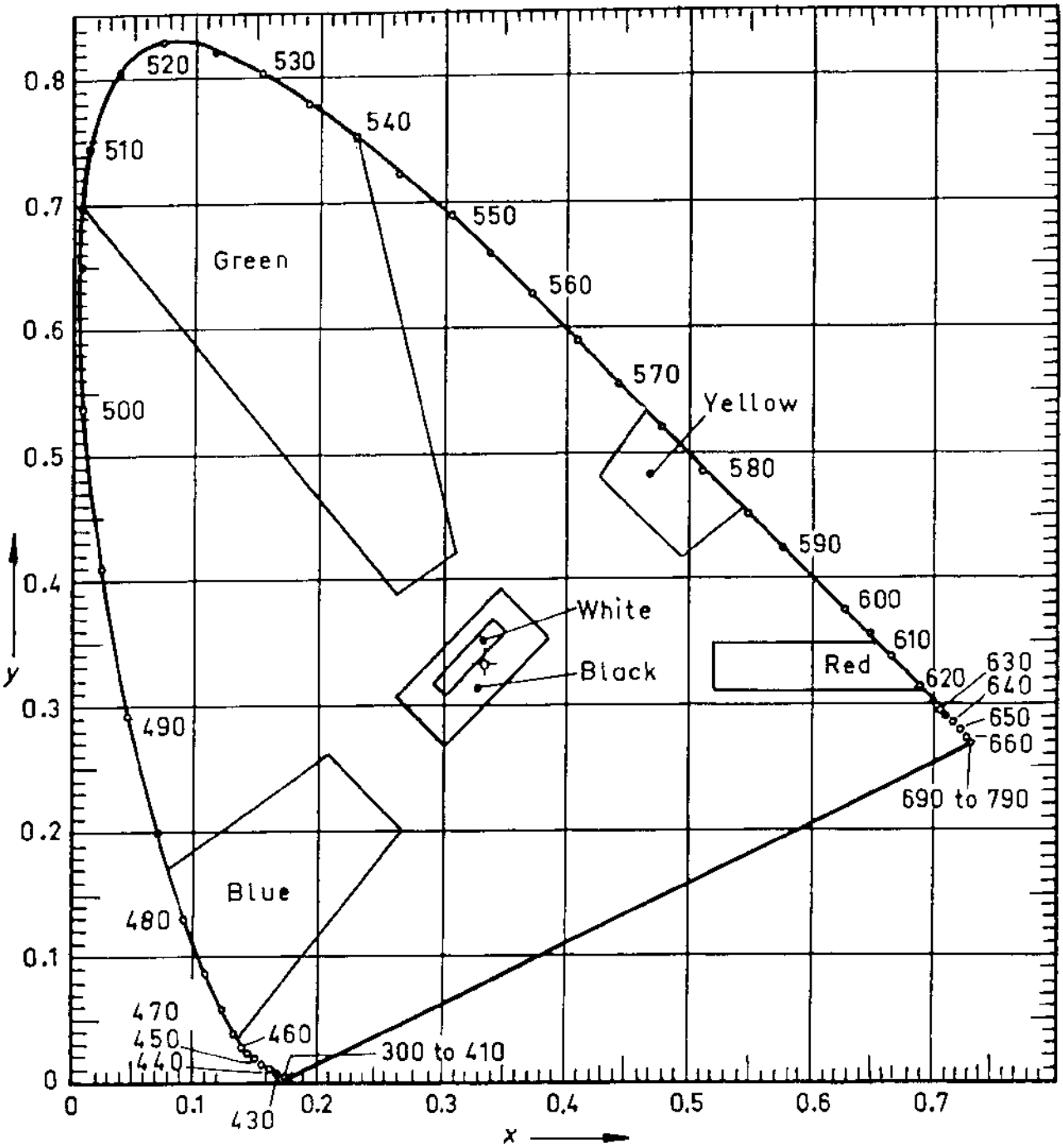

FIGURE A1 CIE CHROMATICITY LIMITS (COLOUR SPACES)
FOR SAFETY COLOUR DESIGNATIONS

COPYRIGHT

Copyrighted material licensed to Intertek Inform^WSP - Parsons Brinckerhoff.Further reproduction, distribution, storage or use on a network is prohibited.
Printed / viewed by: [kiran.gokal@wsp.com] @ 2026-03-11

APPENDIX B

INDEX OF SYMBOLIC SAFETY SIGNS

(Normative)

This Appendix comprises an index of all symbolic signs which have been accepted in accordance with AS 2342 for use in accordance with this Standard.

Symbols and symbolic signs shall be used strictly in accordance with Clause 3.2.

Symbolic safety signs are listed as follows:

Table B1—Prohibition signs (Sign Nos 401-405)

Table B2—Mandatory signs (Sign Nos 421-430)

Table B3—Hazard signs (Sign Nos 441-453)

Table B4—Emergency information signs (Sign Nos 471-473)

COPYRIGHT

Copyrighted material licensed to Intertek Inform^WSP - Parsons Brinckerhoff.Further reproduction, distribution, storage or use on a network is prohibited.
Printed / viewed by: [kiran.gokal@wsp.com] @ 2026-03-11

TABLE B1
PROHIBITION SIGNS

Sign No.	Sign	Meaning
401		Smoking prohibited
402		Fire, naked flame and smoking prohibited
403		No pedestrian access
404		Water not suitable for drinking
405		Digging prohibited

COPYRIGHT

Copyrighted material licensed to Intertek Inform^WSP - Parsons Brinckerhoff.Further reproduction, distribution, storage or use on a network is prohibited.
Printed / viewed by: [kiran.gokal@wsp.com] @ 2026-03-11

TABLE B2
MANDATORY SIGNS

Sign No.	Sign	Meaning
421		Eye protection must be worn (Note 1)
422		Full face mask respiratory protection must be worn (Note 2)
423		Half face mask respiratory protection must be worn (Note 2)
424		Head protection must be worn

(*continued*)

COPYRIGHT

Copyrighted material licensed to Intertek Inform^WSP - Parsons Brinckerhoff.Further reproduction, distribution, storage or use on a network is prohibited.
Printed / viewed by: [kiran.gokal@wsp.com] @ 2026-03-11

TABLE B2 (*continued*)

Sign No.	Sign	Meaning
425		Hearing protection must be worn
426		Hand protection must be worn
427		Foot protection must be worn
428		Protective body clothing must be worn

(*continued*)

COPYRIGHT

Copyrighted material licensed to Intertek Inform^WSP - Parsons Brinckerhoff.Further reproduction, distribution, storage or use on a network is prohibited.
Printed / viewed by: [kiran.gokal@wsp.com] @ 2026-03-11

TABLE B2 (*continued*)

Sign No.	Sign	Meaning
429		Face protection must be worn
430		Long hair must be contained or covered

NOTES:

1 Supplementary text indicating type of eye protection, e.g. goggles may be required.

2 Supplementary text to clarify whether a half face or full face mask is required may be needed.

COPYRIGHT

Copyrighted material licensed to Intertek Inform^WSP - Parsons Brinckerhoff.Further reproduction, distribution, storage or use on a network is prohibited.
Printed / viewed by: [kiran.gokal@wsp.com] @ 2026-03-11

TABLE B3
HAZARD SIGNS

Sign No.	Sign	Meaning
441		Unspecified hazard—to be used only with worded-message hazard signs
442		Fire risk
443		Explosion risk
444		Toxic hazard
445		Corrosion risk

(*continued*)

COPYRIGHT

Copyrighted material licensed to Intertek Inform^WSP - Parsons Brinckerhoff.Further reproduction, distribution, storage or use on a network is prohibited.
Printed / viewed by: [kiran.gokal@wsp.com] @ 2026-03-11

TABLE B3 (*continued*)

Sign No.	Sign	Meaning
446		Ionizing radiation risk
447		Electric shock risk
448		Laser beam hazard
449	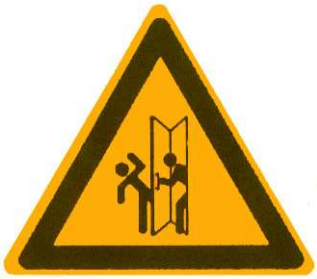	Opening door hazard
450		Forklifts hazard

(*continued*)

COPYRIGHT

Copyrighted material licensed to Intertek Inform^WSP - Parsons Brinckerhoff.Further reproduction, distribution, storage or use on a network is prohibited.
Printed / viewed by: [kiran.gokal@wsp.com] @ 2026-03-11

TABLE B3 (*continued*)

Sign No.	Sign	Meaning
451		Non-ionizing radiation risk
452		Biological hazard
453		Guard dog hazard

COPYRIGHT

Copyrighted material licensed to Intertek Inform^WSP - Parsons Brinckerhoff.Further reproduction, distribution, storage or use on a network is prohibited.
Printed / viewed by: [kiran.gokal@wsp.com] @ 2026-03-11

TABLE B4
EMERGENCY INFORMATION SIGNS
(Note 1)

Sign No.	Sign	Meaning
471		First aid
472		Emergency (safety) eye wash (Note 2)
473		Emergency (safety) shower (Note 2)

NOTES:

1 The use of directional arrows with these signs is given in Clause 3.4.5.

2 It is recommended that text indicating the required washing time (e.g. 'wash eyes for 15 minutes') be added to these signs, as the required washing time will be frequently underestimated. Because Sign No. 472 did not quite reach the minimum comprehension level when tested to AS 2342, the added text should also ensure that the sign is understood.

COPYRIGHT

Copyrighted material licensed to Intertek Inform^WSP - Parsons Brinckerhoff.Further reproduction, distribution, storage or use on a network is prohibited.
Printed / viewed by: [kiran.gokal@wsp.com] @ 2026-03-11

APPENDIX C
DESIGN OF DANGER SIGN SYMBOLS
(Normative)

The DANGER symbol shall comprise a red oval shape with the word DANGER superimposed in white letters. The symbol shall be placed on a black background, covering the full width or height of the sign depending on whether the symbol is at the top or to the left side of the sign.

Design of the symbol shall be as shown in Figure C1.

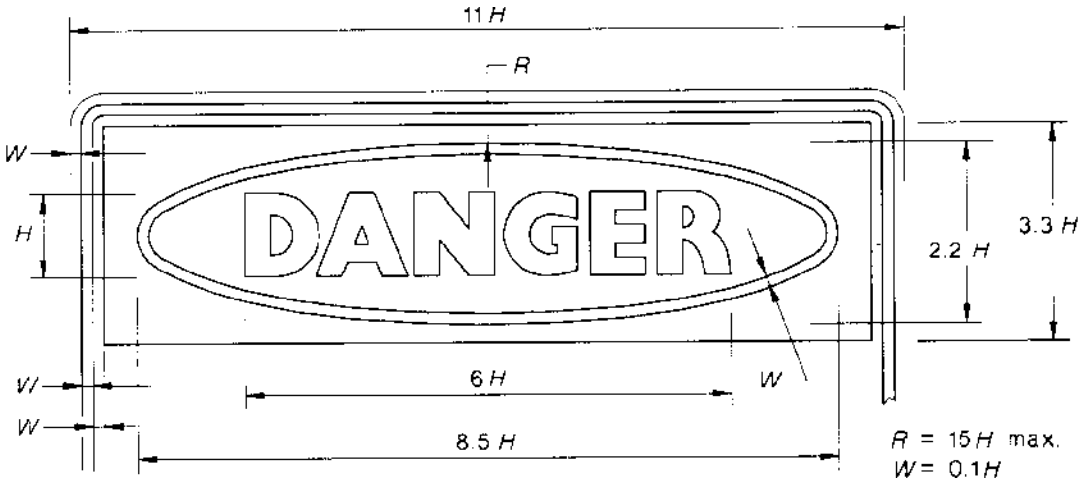

FIGURE C1 DANGER SIGN SYMBOL

COPYRIGHT

Copyrighted material licensed to Intertek Inform^WSP - Parsons Brinckerhoff.Further reproduction, distribution, storage or use on a network is prohibited.
Printed / viewed by: [kiran.gokal@wsp.com] @ 2026-03-11

APPENDIX D

GUIDE FOR THE LAYOUT DESIGN OF SAFETY SIGNS

(Informative)

D1 GENERAL This Appendix gives guidance on the layout, and critical dimensions and spacings of elements on safety signs.

D2 SYMBOLIC SIGNS The layout and design of symbolic signs are as follows:

(a) *Signs without target board* These should be exactly as shown in Appendix B.

(b) *Single and multiple signs with target board* The dimensions of the target board relative to the size of the symbolic sign(s) is shown in Figure D1.

The target board should be white or yellow for warning signs, and white only for other signs. Black may also be used for warning signs (see Clause 2.3.3(b)).

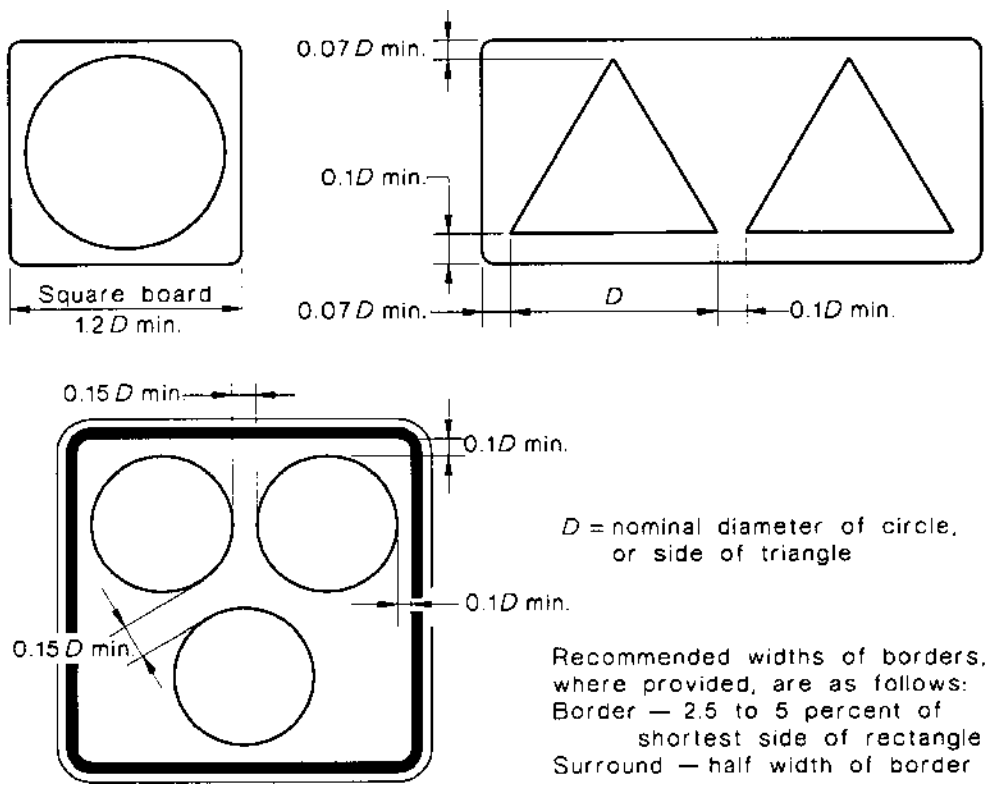

NOTE: Where circular and triangular symbolic signs are to be placed on the same target board, the relative sizes should be such that the theoretical base of the triangle is 1.25 times the diameter of the circle (or theoretical height equal to 1.08 times the diameter).

FIGURE D1 CRITICAL DIMENSIONS FOR SINGLE AND MULTIPLE SYMBOLIC SIGNS ON A TARGET BOARD

COPYRIGHT

Copyrighted material licensed to Intertek Inform^WSP - Parsons Brinckerhoff.Further reproduction, distribution, storage or use on a network is prohibited.
Printed / viewed by: [kiran.gokal@wsp.com] @ 2026-03-11

D3 COMBINATION WORD/SYMBOL SIGNS (OTHER THAN DANGER SIGNS)

Critical layout dimensions for both composite and hybrid signs are illustrated in Figure D2. For warning signs the worded part of the message should comprise black letters on a white or yellow background, with optional black border and white or yellow surround. For regulatory signs, the background and surround colour should be white only. For emergency information and fire signs both symbol and words should be placed on the one symbolic shape, i.e. the green or red rectangle.

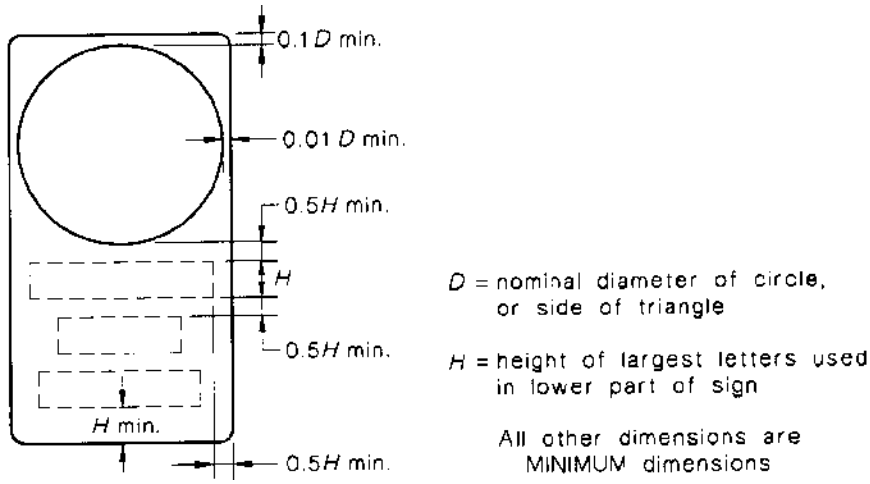

NOTE: For dimensions of borders, where provided, see Figure D1.

FIGURE D2 CRITICAL DIMENSION FOR COMBINATION WORD/SYMBOL SIGNS

D4 SIGNS WITH WORD MESSAGES ONLY (OTHER THAN DANGER SIGNS)

The layout of these signs is as follows:

(a) *Regulatory and hazard signs* Regulatory signs comprise black letters on a white rectangular background with optional black border and white surround. Hazard signs comprise black letters on a yellow rectangular background with optional black border and yellow surround.

A symbolic sign or shape is used on these signs as follows:

(i) *Regulatory-prohibition* The red annulus and slash with white interior and no symbol (see Table 2.1).

(ii) *Hazard* The yellow triangle with black enclosure and black exclamation mark (see Appendix B, Table B3, Sign No. 441).

The symbolic sign or symbolic shape should be placed within the rectangle, *above* the words if the sign has its long axis vertical, or *to the left* of the words if the sign has its long axis horizontal.

No symbolic sign or shape is used on *regulatory-mandatory* signs. These signs comprise black letters only, on a white rectangular background with long axis vertical, and an optional black border with white surround.

Critical layout dimensions for worded regulatory and hazard signs are shown in Figure D3.

COPYRIGHT

Copyrighted material licensed to Intertek Inform^WSP - Parsons Brinckerhoff.Further reproduction, distribution, storage or use on a network is prohibited.
Printed / viewed by: [kiran.gokal@wsp.com] @ 2026-03-11

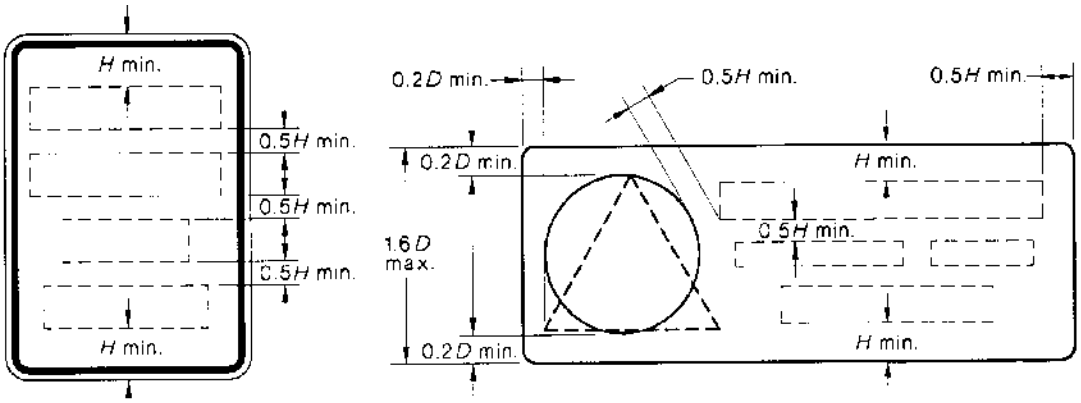

(a) Mandatory signs (b) Prohibition and warning signs

D = nominal diameter of circle, or side of triangle
H = height of largest letters used on sign

NOTE: For widths of borders, where provided, see Figure D1.

FIGURE D3 CRITICAL DIMENSIONS FOR WORDED REGULATORY AND WARNING SIGNS

(b) *Emergency information and fire signs* These signs comprise white legends within green or red rectangular signboards, with critical layout dimensions as shown in Figure D4.

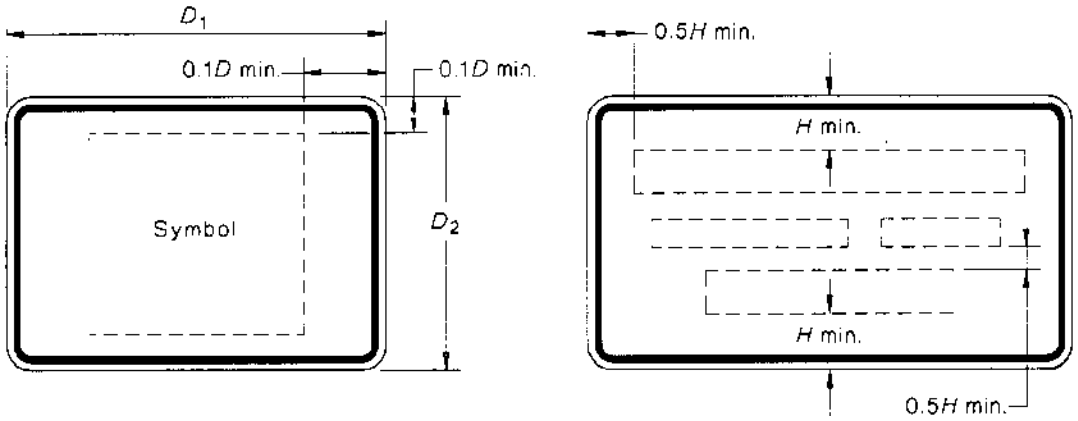

$D = D_1$ or D_2, whichever is the smaller
H = height of largest letters used on sign

NOTE: The recommended border width is 5 to 8 percent of the shortest side of the sign.

FIGURE D4 CRITICAL DIMENSIONS FOR EMERGENCY INFORMATION AND FIRE SIGNS

D5 DANGER SIGNS These signs comprise a white rectangle, which may have a black border and white surround. A red oval DANGER symbol (see Appendix C) on a black background is placed either above or to the left of the white rectangle as illustrated in the typical arrangements in Figure D5. Critical layout dimensions for the DANGER sign are shown in Figure D6.

D6 CORNERS Corners on all square, rectangular and triangular signs should be rounded.

COPYRIGHT

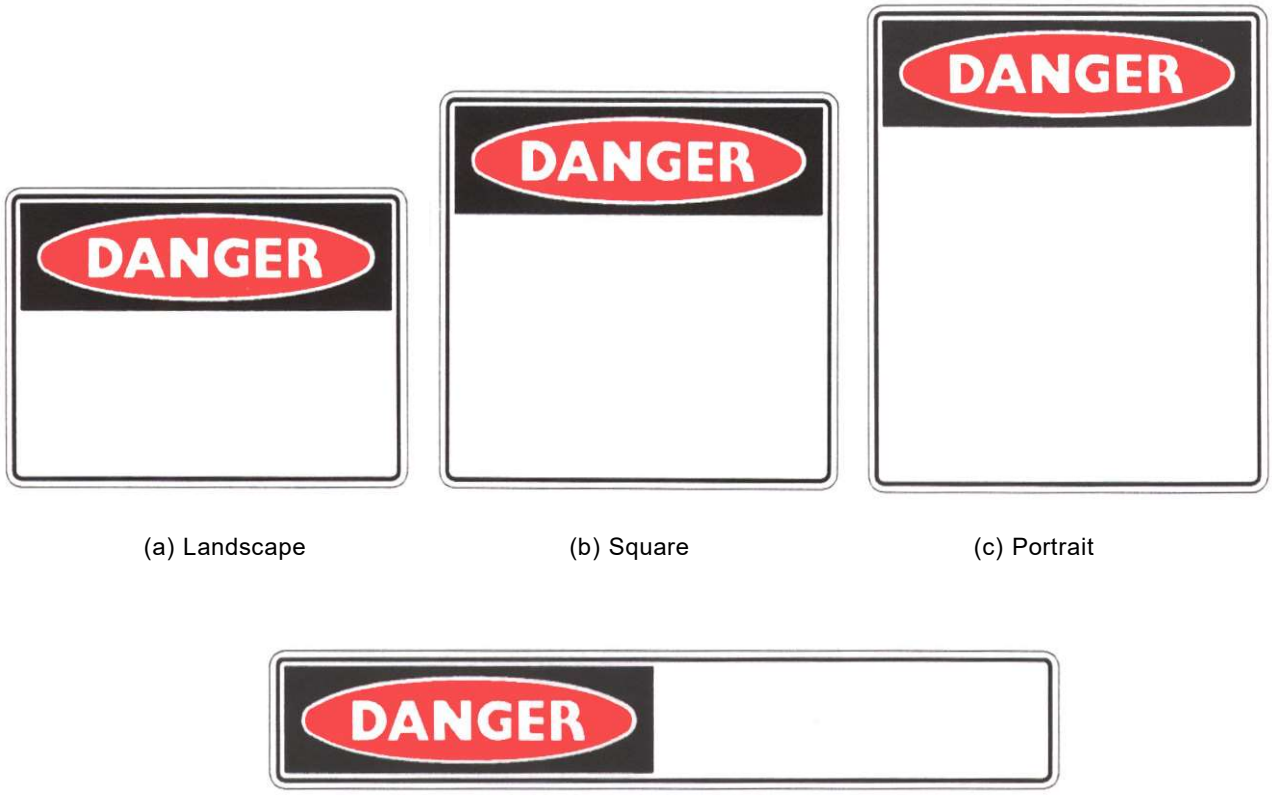

(a) Landscape (b) Square (c) Portrait

(d) Horizontal

FIGURE D5 TYPICAL ARRANGEMENTS OF DANGER SIGNS

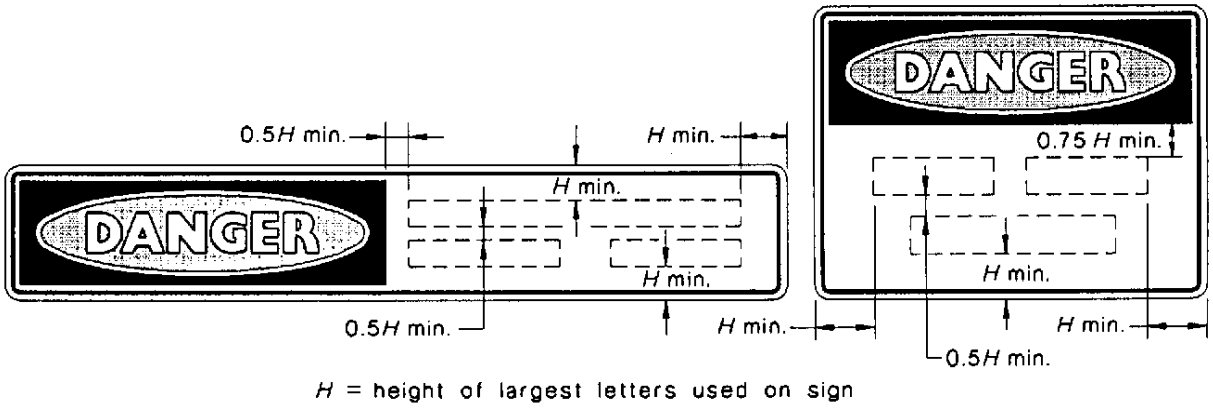

NOTES:

1 Requirements for the design of the DANGER symbol are given in Appendix C.

2 For widths of borders, where provided, see Figure D1.

FIGURE D6 CRITICAL DIMENSIONS FOR DANGER SIGNS

Copyrighted material licensed to Intertek Inform^WSP - Parsons Brinckerhoff.Further reproduction, distribution, storage or use on a network is prohibited.
Printed / viewed by: [kiran.gokal@wsp.com] @ 2026-03-11

COPYRIGHT

Copyrighted material licensed to Intertek Inform^WSP - Parsons Brinckerhoff.Further reproduction, distribution, storage or use on a network is prohibited.
Printed / viewed by: [kiran.gokal@wsp.com] @ 2026-03-11

APPENDIX E

GUIDE FOR THE USE OF RETROREFLECTIVE MATERIAL ON SIGNS

(Informative)

E1 SCOPE This Appendix gives recommendations on how retroreflective material should be used (see Clause 3.5.2).

E2 FULLY REFLECTORIZED SIGNS These are signs comprising a white or coloured legend, on a coloured or white background, where it is desired that the sign will be seen in full colour both by normal diffuse light and retroreflected light.

To ensure that the detail of the legend can be distinguished against the background with minimum loss of legibility due to one appearing to 'wash' into the other, the luminance contrast ratio between light material and dark material should be not less than—

(a) 8 to 1 in the case of white with red; or

(b) 7 to 1 in the case of white with blue or green.

Luminance contrast ratios can be calculated from coefficients of luminous intensity per square metre (CIL/m^2) given in sheeting manufacturers' data, or if unavailable, from values given in AS/NZS 1906.1 for the corresponding sheeting type and colour.

Note that white and yellow cannot be used together unless there is a reasonably thick black or dark coloured outline separating the two colours.

E3 PARTIALLY REFLECTORIZED SIGNS These are signs where usually only one colour is retroreflective. The other colour in such cases, will usually be black.

Partially reflectorized signs must always have the *lighter* colour retroreflective. The darker colour will then always appear black in retroreflected light, even though it may be some other colour by diffuse light, and will appear in silhouette on the light colour.

COPYRIGHT

Copyrighted material licensed to Intertek Inform^WSP - Parsons Brinckerhoff.Further reproduction, distribution, storage or use on a network is prohibited.
Printed / viewed by: [kiran.gokal@wsp.com] @ 2026-03-11

APPENDIX F

RECOMMENDED LIGHTING LEVELS FOR ILLUMINATED SIGNS

(Informative)

F1 SCOPE This Appendix gives recommended lighting levels for signs illuminated either externally or internally.

NOTE: The information given in this Appendix has been adapted from BS 873.5.

F2 MEAN LUMINANCE The mean luminance of the *white* (or yellow) portion of a sign, obtained by averaging measurements at several points selected at random over the sign, should be:

(a) *Category 1*—25 to 150 candelas per square metre (cd/m^2).

(b) *Category 2*—100 to 350 cd/m^2.

Category 1 requirements are appropriate to situations of low ambient or background lighting, typical of signs on dark internal walls and most night-time outdoor situations.

Category 2 requirements are appropriate to high ambient or background lighting situations, such as signs on brightly lit walls, or against a background of bright lights.

To avoid the possibility of excessive glare, the upper limits on these ranges should not be exceeded.

F3 LUMINANCE RATIOS The mean luminance of the coloured portions of a sign when compared with the mean luminance of the white (or yellow) portions should be within the limits given in Table F1.

TABLE F1

ILLUMINATED SIGN COLOUR/ WHITE LUMINANCE RATIOS

Colour	Ratio
Red	0.05 to 0.15
Yellow	0.70 min.
Green	0.15 to 0.20
Blue	0.02 to 0.10

F4 UNIFORMITY The ratio of maximum luminance to minimum luminance of any *one colour* across an illuminated sign should not be more than 6 to 1. Sharp changes of luminance, or shadowing, should also be avoided.

COPYRIGHT

NOTES

Copyrighted material licensed to Intertek Inform^WSP - Parsons Brinckerhoff.Further reproduction, distribution, storage or use on a network is prohibited.
Printed / viewed by: [kiran.gokal@wsp.com] @ 2026-03-11

NOTES

Copyrighted material licensed to Intertek Inform^WSP - Parsons Brinckerhoff.Further reproduction, distribution, storage or use on a network is prohibited.
Printed / viewed by: [kiran.gokal@wsp.com] @ 2026-03-11

NOTES

Copyrighted material licensed to Intertek Inform^WSP - Parsons Brinckerhoff.Further reproduction, distribution, storage or use on a network is prohibited.
Printed / viewed by: [kiran.gokal@wsp.com] @ 2026-03-11

Copyrighted material licensed to Intertek Inform^WSP - Parsons Brinckerhoff.Further reproduction, distribution, storage or use on a network is prohibited.
Printed / viewed by: [kiran.gokal@wsp.com] @ 2026-03-11

Standards Australia

Standards Australia is an independent company, limited by guarantee, which prepares and publishes most of the voluntary technical and commercial standards used in Australia. These standards are developed through an open process of consultation and consensus, in which all interested parties are invited to participate. Through a Memorandum of Understanding with the Commonwealth government, Standards Australia is recognized as Australia's peak national standards body.

Australian Standards

Australian Standards are prepared by committees of experts from industry, governments, consumers and other relevant sectors. The requirements or recommendations contained in published Standards are a consensus of the views of representative interests and also take account of comments received from other sources. They reflect the latest scientific and industry experience. Australian Standards are kept under continuous review after publication and are updated regularly to take account of changing technology.

International Involvement

Standards Australia is responsible for ensuring that the Australian viewpoint is considered in the formulation of international Standards and that the latest international experience is incorporated in national Standards. This role is vital in assisting local industry to compete in international markets. Standards Australia represents Australia at both ISO (The International Organization for Standardization) and the International Electrotechnical Commission (IEC).

Electronic Standards

All Australian Standards are available in electronic editions, either downloaded individually from our Web site, or via on-line and CD ROM subscription services. For more information phone 1300 65 46 46 or visit us at

www.standards.com.au

Copyrighted material licensed to Intertek Inform^WSP - Parsons Brinckerhoff.Further reproduction, distribution, storage or use on a network is prohibited.
Printed / viewed by: [kiran.gokal@wsp.com] @ 2026-03-11

Standards Australia

ISBN 0 7262 8811 X

Printed in Australia